

HAZARD TEAM HELMET

AS SEEN IN THE VIDEO GAME
STAR TREK VOYAGER ELITE FORCE
1:1 SCALE

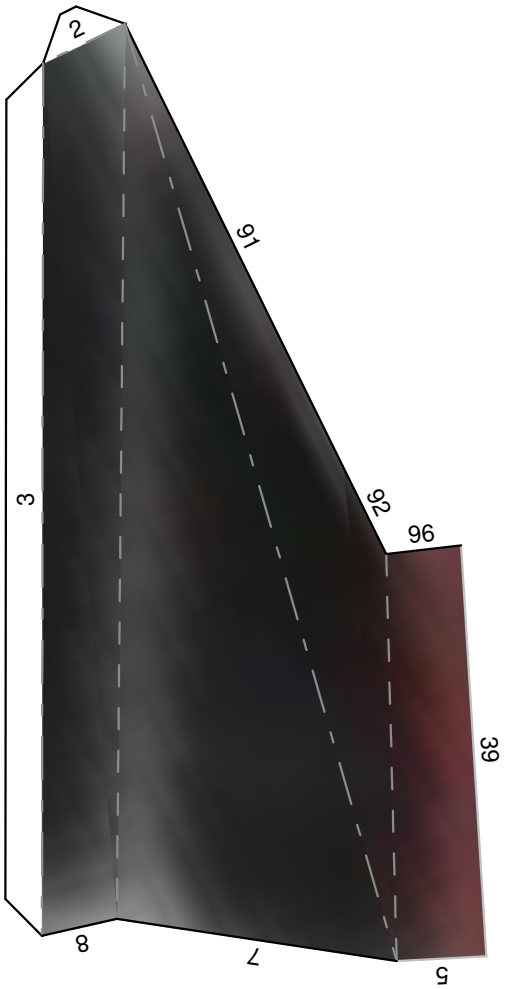

INSTRUCTIONS

1. Print the template on cardstock.
2. Make a mountain fold on the dashed lines.
3. Make a valley fold on the dash dot lines.
4. Assemble as indicated by the numbers.
5. Glue sparingly at the flaps.

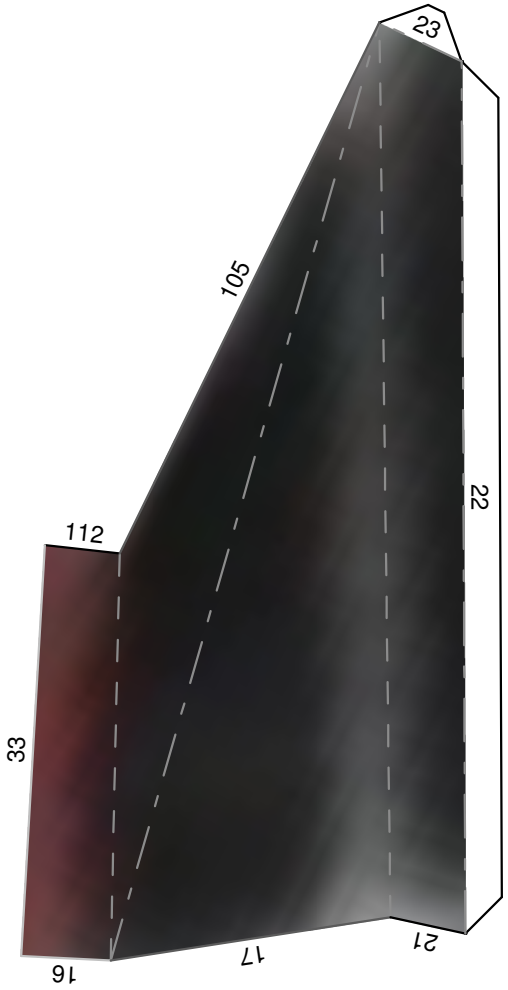



This fan-created model is not for sale or redistribution. Any and all trademarks and copyrights are the properties of their respective owners. Model design © 2010 C. Jefferson OConnor, www.tektonten.blogspot.com



This fan-created model is
not for sale or redistribution.
Any and all trademarks and
copyrights are the properties
of their respective owners.
Model design © 2010
C. Jefferson OConnor,
www.tektonten.blogspot.com



This fan-created model is
not for sale or redistribution.
Any and all trademarks and
copyrights are the properties
of their respective owners.
Model design © 2010
C. Jefferson OConnor,
www.tektonten.blogspot.com

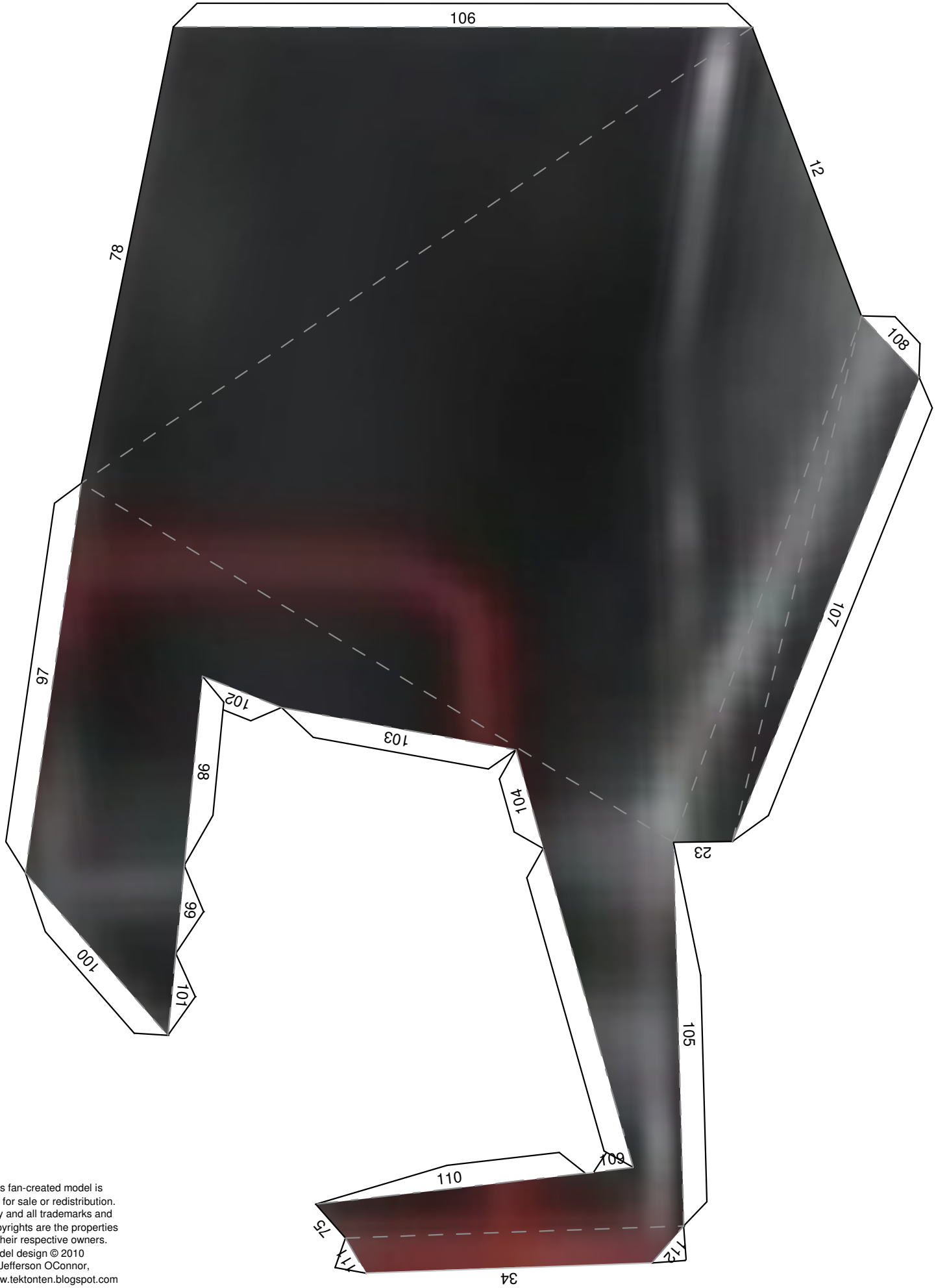

This fan-created model is
not for sale or redistribution.
Any and all trademarks and
copyrights are the properties
of their respective owners.
Model design © 2010
C. Jefferson OConnor,
www.tektonten.blogspot.com

This fan-created model is
not for sale or redistribution.
Any and all trademarks and
copyrights are the properties
of their respective owners.
Model design © 2010
C. Jefferson OConnor,
www.tektonten.blogspot.com



This fan-created model is
not for sale or redistribution.
Any and all trademarks and
copyrights are the properties
of their respective owners.
Model design © 2010
C. Jefferson OConnor,
www.tektonten.blogspot.com

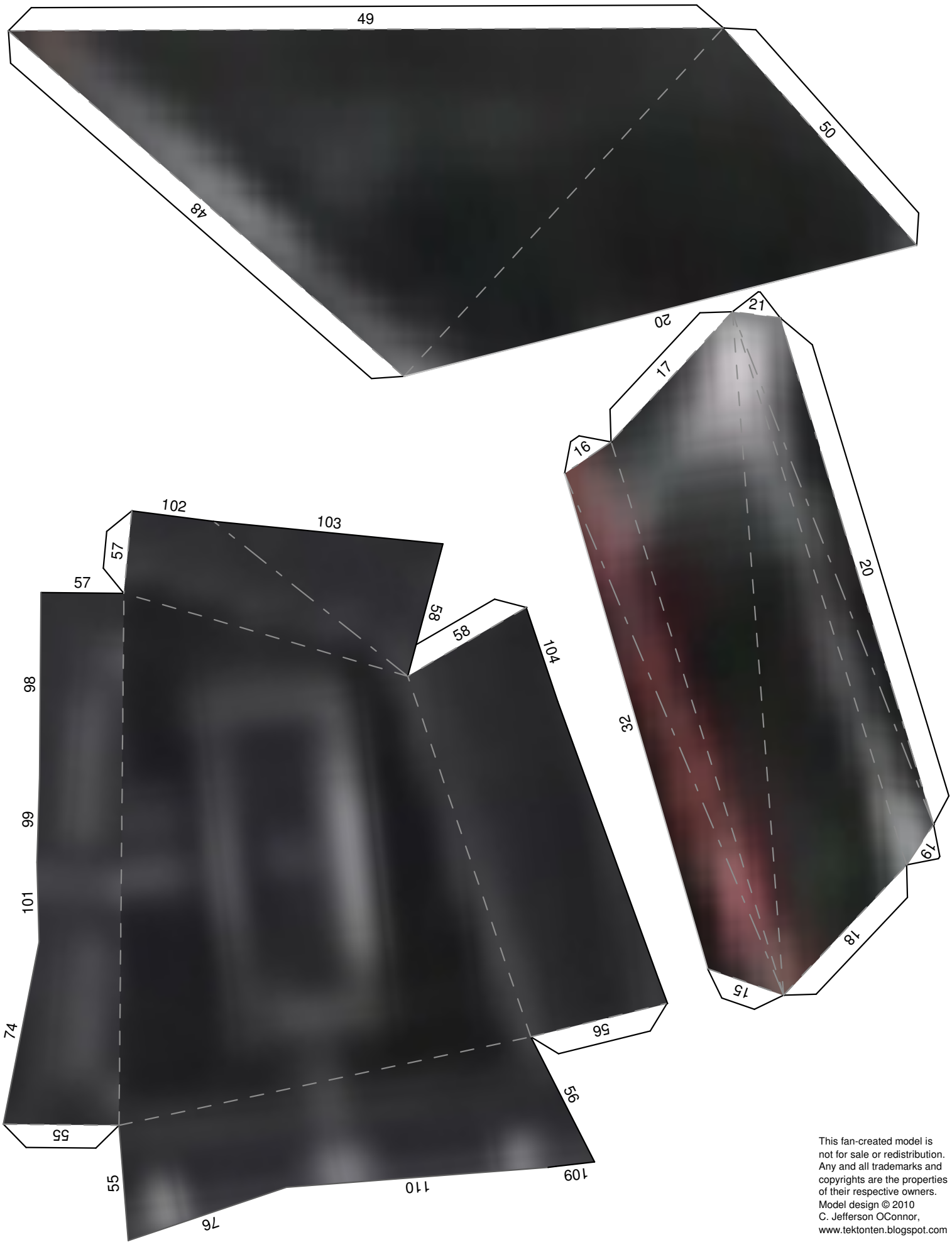

This fan-created model is not for sale or redistribution. Any and all trademarks and copyrights are the properties of their respective owners.
Model design © 2010
C. Jefferson OConnor,
www.tektonten.blogspot.com

This fan-created model is
not for sale or redistribution.
Any and all trademarks and
copyrights are the properties
of their respective owners.
Model design © 2010
C. Jefferson OConnor,
www.tektonten.blogspot.com

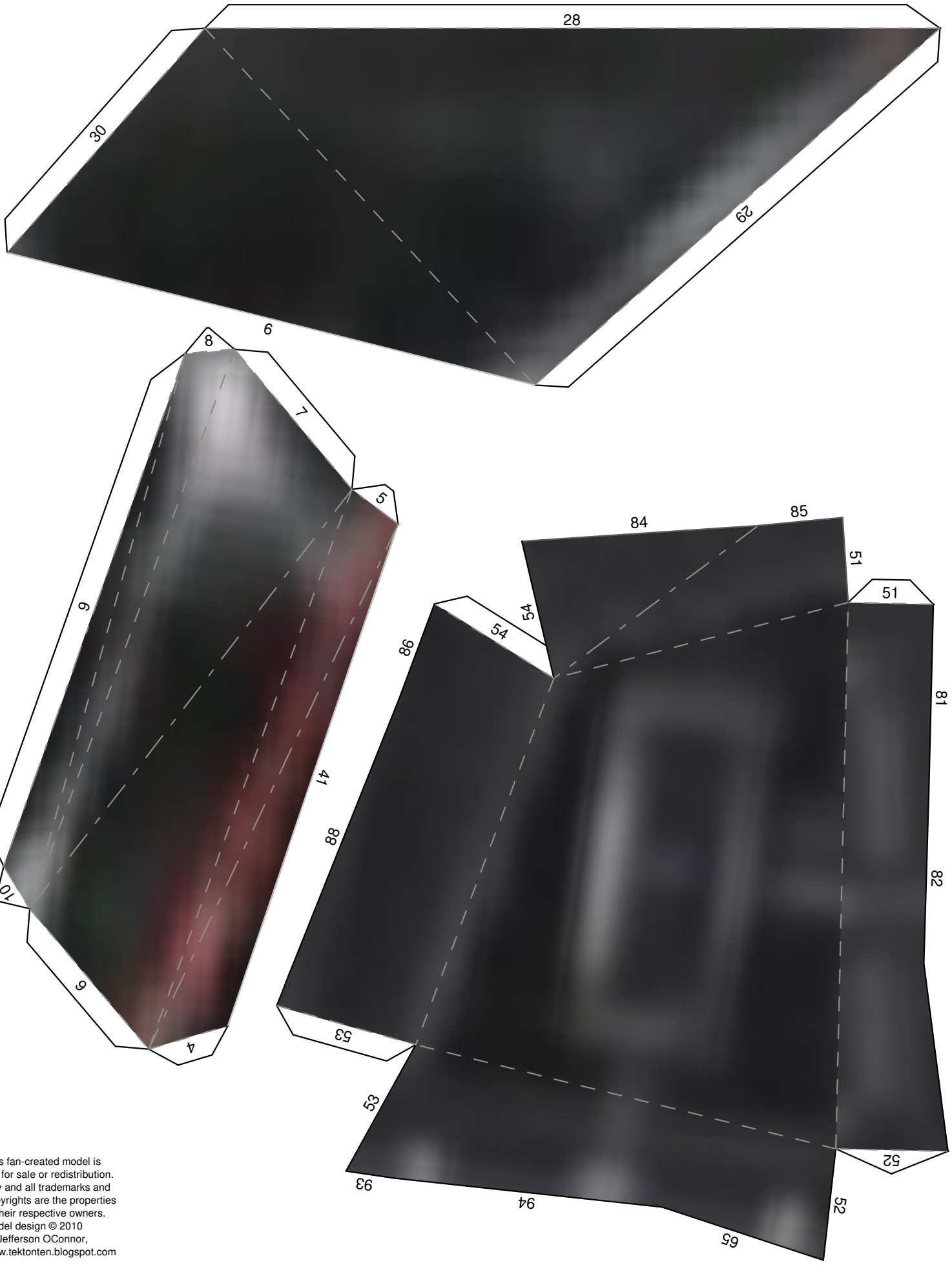

This fan-created model is
not for sale or redistribution.
Any and all trademarks and
copyrights are the properties
of their respective owners.
Model design © 2010
C. Jefferson OConnor,
www.tektonten.blogspot.com

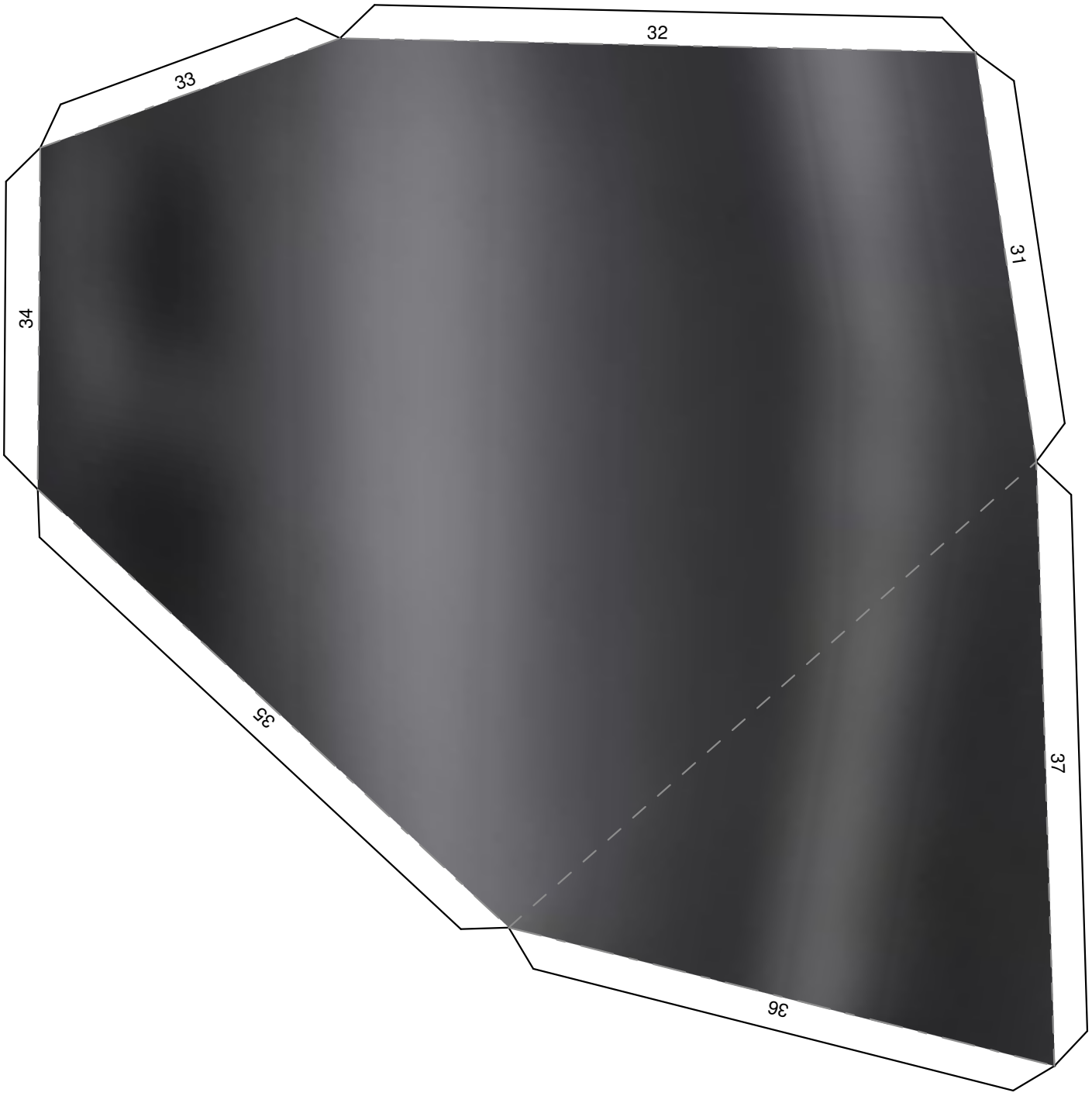

This fan-created model is
not for sale or redistribution.
Any and all trademarks and
copyrights are the properties
of their respective owners.
Model design © 2010
C. Jefferson OConnor,
www.tektonten.blogspot.com

This fan-created model is
not for sale or redistribution.
Any and all trademarks and
copyrights are the properties
of their respective owners.
Model design © 2010
C. Jefferson OConnor,
www.tektonten.blogspot.com

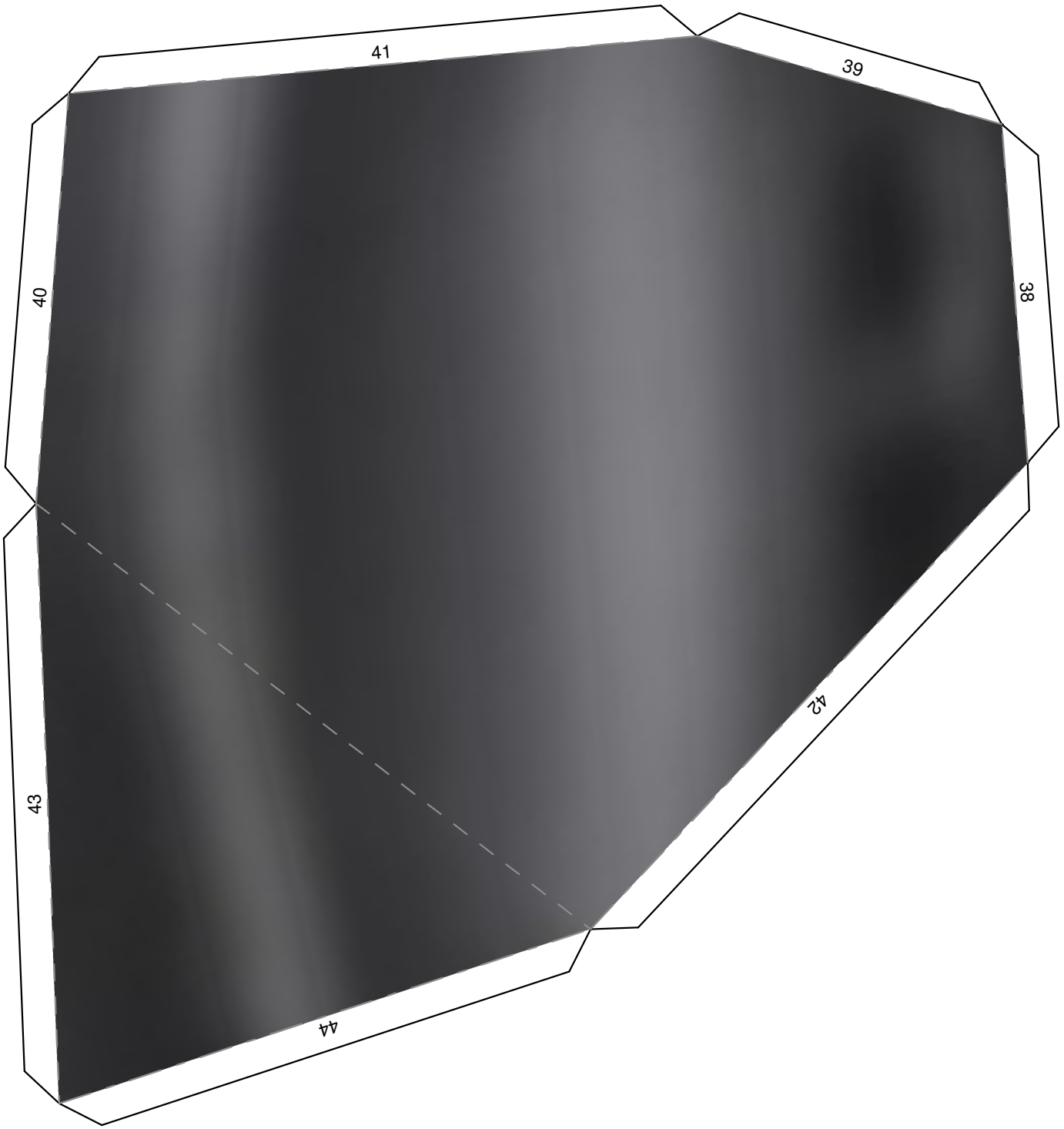

This fan-created model is
not for sale or redistribution.
Any and all trademarks and
copyrights are the properties
of their respective owners.
Model design © 2010
C. Jefferson OConnor,
www.tektonten.blogspot.com

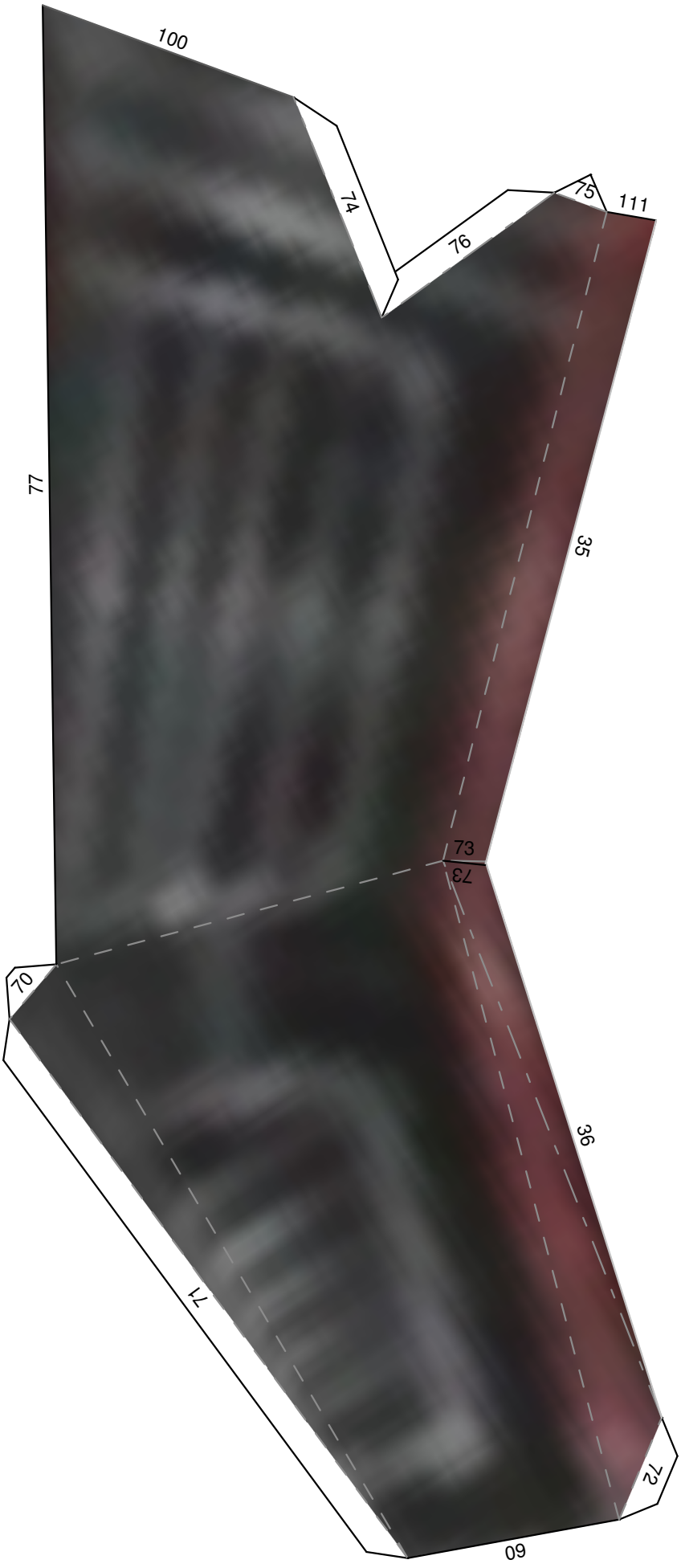

This fan-created model is
not for sale or redistribution.
Any and all trademarks and
copyrights are the properties
of their respective owners.
Model design © 2010
C. Jefferson OConnor,
www.tektonten.blogspot.com

This fan-created model is
not for sale or redistribution.
Any and all trademarks and
copyrights are the properties
of their respective owners.
Model design © 2010
C. Jefferson OConnor,
www.tektonten.blogspot.com

This fan-created model is
not for sale or redistribution.
Any and all trademarks and
copyrights are the properties
of their respective owners.
Model design © 2010
C. Jefferson OConnor,
www.tektonten.blogspot.com